PL100 PL101 PL102 PL103

D147 D146 UF5402 UF5402 D122 D112 RL207 RL207 D119 D104 RL207 RL207 D148 D149 UF5402 UF5402

C174 22u 450V C175 22u 450V 400V 68u C101

+400V

C105 4n7 630V C507 C508 16V 22u

R182 100k R164 100k R110 100k R181 100k R129 100k R109 100k R147 100k R128 100k R224 100k R225 100k

C10247p 2kV HER207 D123 HER207 D103

F112 50R F111 50R F115 180R F116 180R

TR100

2 3 4 5 6 11 10 9 8

24V_AC IN_9 12V_AC

+400V AUX F107 50R S124 R245 10k

R195 1k D128 RS1008FL VCC C115 47u 50V D105 C22V

D106 1N4148 R157 10R R139 10R Q105 FQPF9N50C C103 47p 2kV GATE Q107 BC858B R120 10k

CS R121 10R C159 1n 50V

R239 1R R240 1R R241 1R R242 1R R243 1R R244 1R

S126 800R F109 F108 800R S140

AC1 AC2

S158 S110 C124 1n 4kV 4kV 1n C125

S105 C123 1n 4kV S127 C122 1n 4kV

TH102 10R TH100 10R 10R TH101

C500 220n 275V C520 275V 220n

AC3 AC2

LF106

AC6 AC7

R166 2M R183 2M R111 2M R165 2M R148 2M R130 2M

C501 220n 275V C502 220n 275V C142 275V 220n V100 510V/530pF

CN103 P3 P4 S136 S142 S117 S141 4kV 1n C119 4kV 1n C118

3.15A/250V FS101 S122 S108 FS100 3.15A/250V S125 C117 1n 4kV S143 C126 1n 4kV

P1 CN102 P2

AUX R212 100k +400V R208 100k R215 100k C12V D139 50V 1n C177 R211 100k R210 100k R213 100k

U101 FAN6300 DET FB CS GND HV NC VDD GATE

C505 22u 16V C506 22u 16V VCC GATE

D34 RS1008FL D35 RS1008FL AC3 AC2 R218 10R R217 10R R219 10R R219 10R CS

D145 C12V

FB R173 10R C149 1n 50V D100 C12V U102 K10104 R158 1k +12VCC R159 1k R189 1k C151 1n 50V R141 1k C157 1n 50V R122 1k +12VCC

D109 C6V8 U100 TL431SAMF2

+12VCC SOFT_START R123 1k D101 1N4148 C156 1n 50V R140 1k Q101 BC848B C148 1n 50V R104 1k R175 1k ST_BY

C120 1n 4kV C121 1n 4kV R134 10R R115 10R S109

R127 4M7

Q105 SOGUTUCU OPS. HS1 S162 S169

D130 SOGUTUCU OPS. HS3 S160

D131 SOGUTUCU OPS. HS4 S161

SP1 SP2 AC7 +400V SP3 SP4 AC3

PIN_9 S132 S139 S168 12V_AC

12V DIODE OPS. STPS20H100CFP D130 12V_AC 12V_DC

24V DIODE OPS. STPS20H100CFP D131 24V_AC +24VCC

D125 SB5100 D121 SB5100 D117 SB5100 12V_AC 12V_DC 16V 2700u C160 16V 2700u C160 L100 1u 16V 1n C109 C509 22u 16V +12VCC

D116 UF5402 D120 UF5402 D126 UF5402 24V_AC 35V 1m C110 35V 1m C111 35V 1m C532 +24VCC

R250 10R R250 10R +24VCC

+24VCC S106 F101 26R +24VCC_SW

R10 1k +24V_REG R161 1k R177 1k C153 1n 50V Q112 FDS4685 C134 22u 16V 35V 470u C112 D115 C12V S102

ST_BY R124 1k R178 1k Q111 BC848B Q108 BC848B C162 1n 50V R106 1k 1n 50V C154 D114 C12V R162 1k

+24V_REG Q102 BC848B R144 1k R126 1k R216 1k 1n 50V C504

+12VCC R103 1k R174 1k Q104 BC848B +5V_STBY C127 10u 10V C136 10u 10V D113 C6V8

+24VCC_SW R223 10R R220 10R R221 10R R222 10R

12V_AC D137 BA159 R198 10R R199 10R R200 10R R202 10R

24V_AC D136 BA159 R204 10R R205 10R R206 10R R203 10R

2x6 PINLI MB SOKET CN4

+24VCC_SW 1 2
ST_BY 3 4
BL_ON-OFF 5 6
PWM_DIM 7 8
+5V_STBY 9 10 +12VCC
+12VCC 11 12 +12VCC

VESTEL PROJECT NAME : 17ips12-r3 A3

SCH NAME :1 T. SHT 2

DRAWN BY :<YOUR NAME HERE> 09-06-2015_15:51

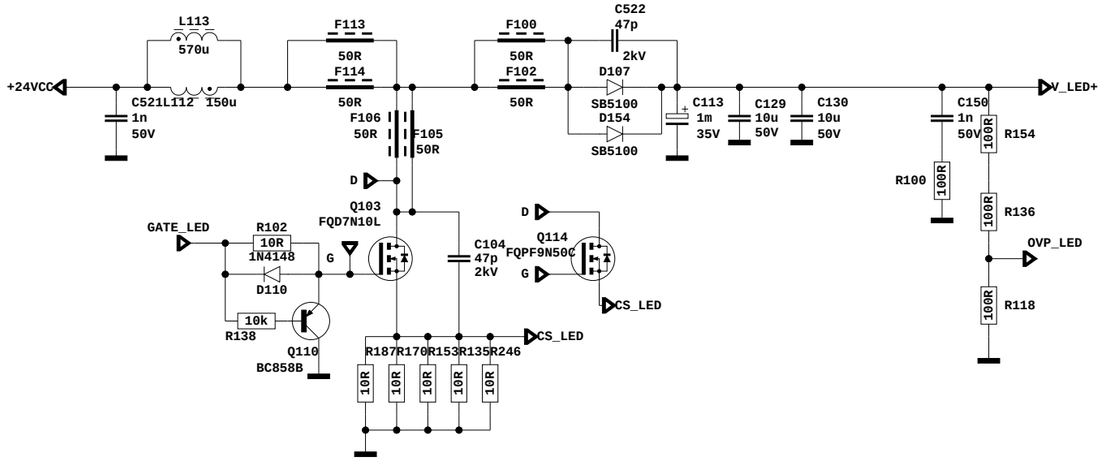

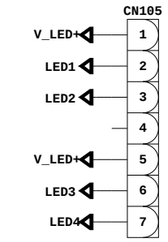

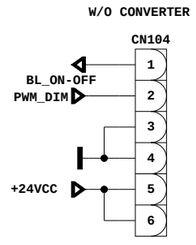

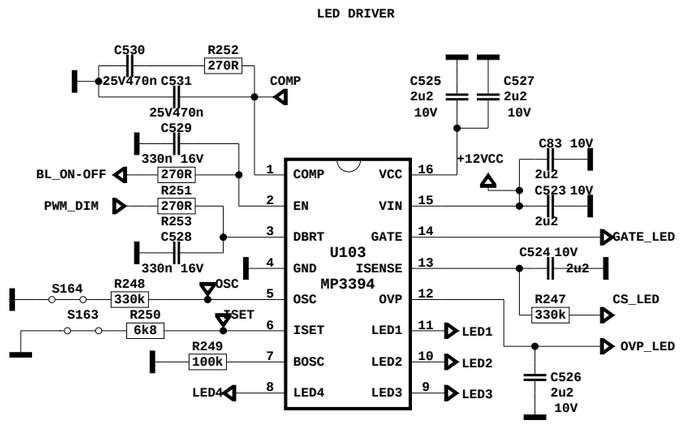

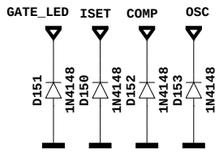

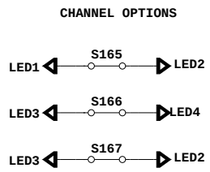

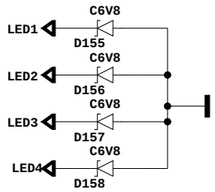

VESTEL	PROJECT NAME : 17ips12-r3		A3
SCH NAME :2		T. SHT	2
DRAWN BY :<YOUR NAME HERE>		08-06-2015_11:07	

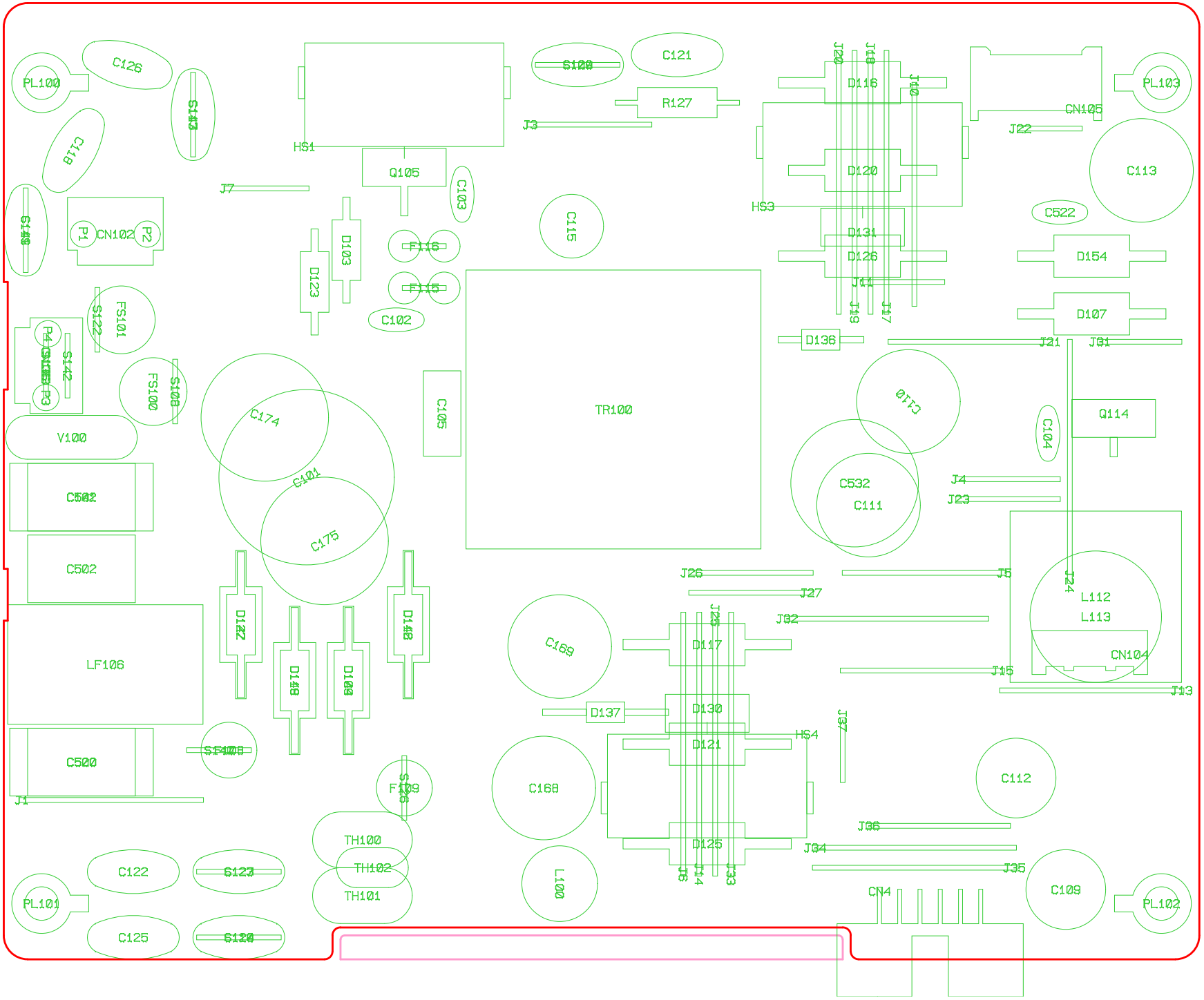
PL100
C126
S124
C118
S143
S144
CN102
P1
P2
HS1
Q105
C103
J7
D103
D123
F116
F115
C102
C115
S100
C121
R127
J3
D116
D120
D131
D126
D136
J20
J18
J10
J9
J19
J17
HS3
PL103
CN105
J22
C113
C522
D154
D107
J21
J31
FS101
S122
P4
P3
S142
FS100
S108
V100
C174
C175
S101
C105
TR100
C110
C532
C111
C104
Q114
J4
J23
C502
LF106
C500
J1
D122
D118
D100
D108
S106
S109
F109
TH100
TH102
TH101
C122
C125
S123
S120
PL101
C169
D137
D117
D130
D121
D125
HS4
J27
J26
J5
J24
J32
L112
L113
CN104
J15
J13
J36
J34
J35
J33
J14
J8
C168
L100
C112
C109
CN4
PL102